Installation Guide
3.6M Glass Side Panel

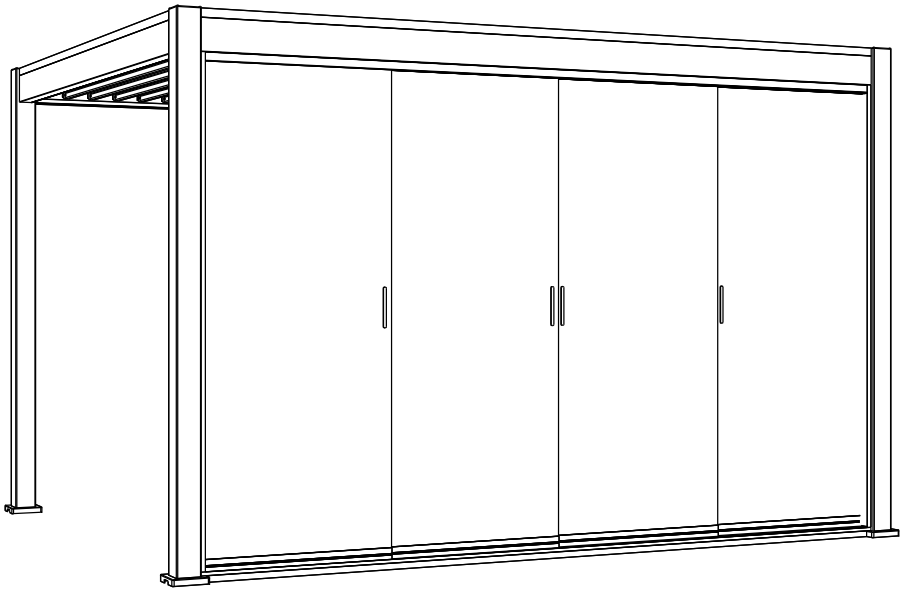

Please read the following instructions completely before you begin assembly. Any errors made during installation are not covered by the product's warranty. If you have any questions during the installation process, please call us .

NECESSARY TOOLS AND SAFETY GEAR(NOT SUPPLIED)

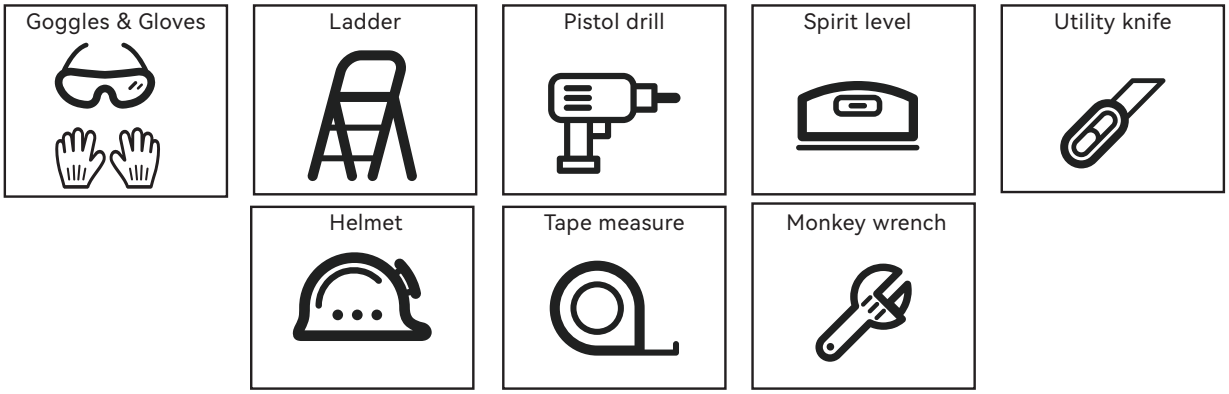

When installing your wind screen on the wall-mounted side, you will need to purchase the corresponding screws/fasteners.

PARTS LISTS (PER CARTON)

3.6M
1/2

REF	PICTURE	QTY
A	92X40-3395	1
B	96X17-3399	1
C	96X30-3341	1
D	95X25-2318	2

REF	PICTURE	QTY
T1	3.9×25mm	28
T2		12
T3	8×100	8

REF	PICTURE	QTY
T4	PH2	1
T5		8
T6	5mm	1

2/2

REF	PICTURE	QTY
E	SLIDING GLASS PANEL 870X19-2305	4

Before installation, please make sure the dimension should be correct as the diagram shows below, namely, A1=A2=A3 and AX=BX.
Please do not install if the dimension is incorrect. Please adjust the finished size before installing.

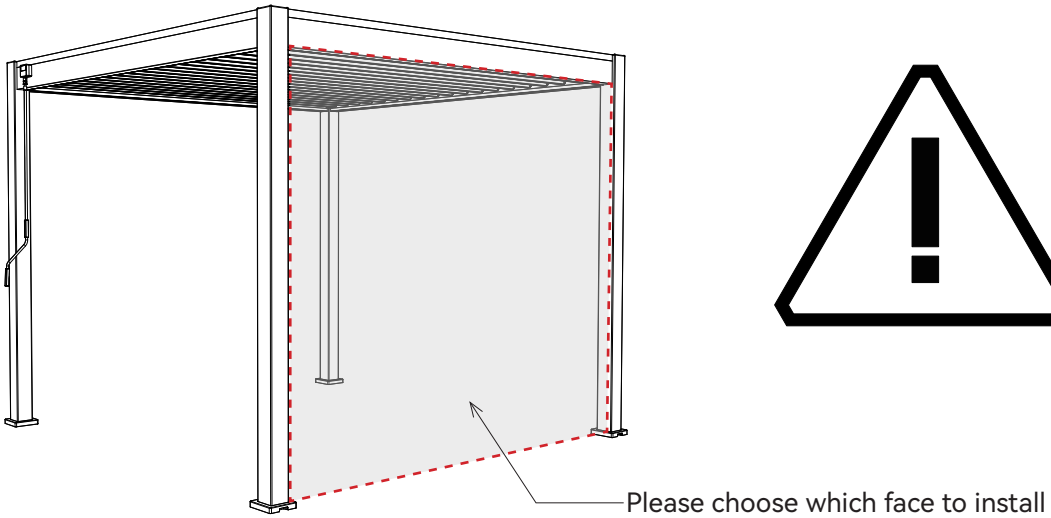

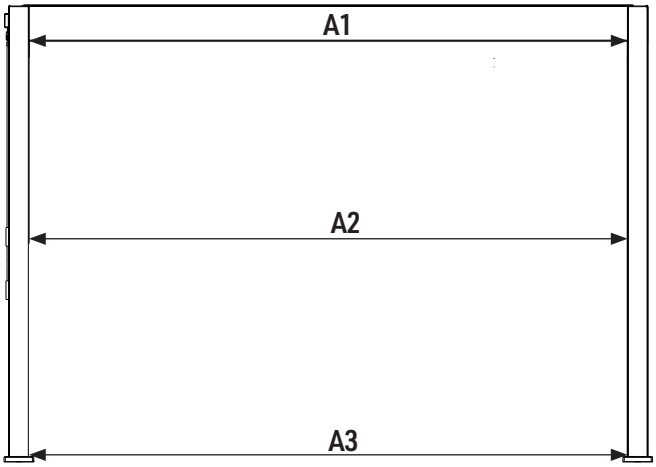

A1=A2=A3

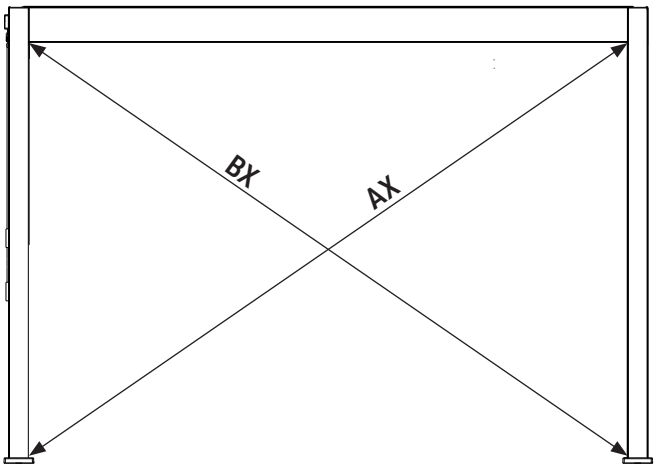

AX=BX

STEP 1

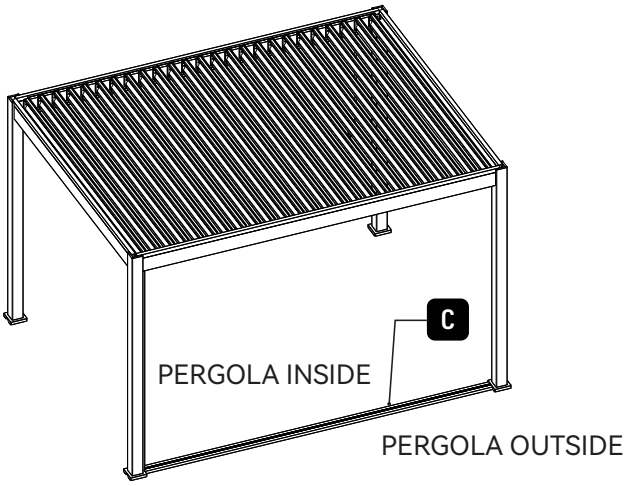

1.1

- Before installation, please check and ensure the ground is flat and even.
- Make the aluminum bottom beam (C) is aligned with the post in the inside of the pergola.

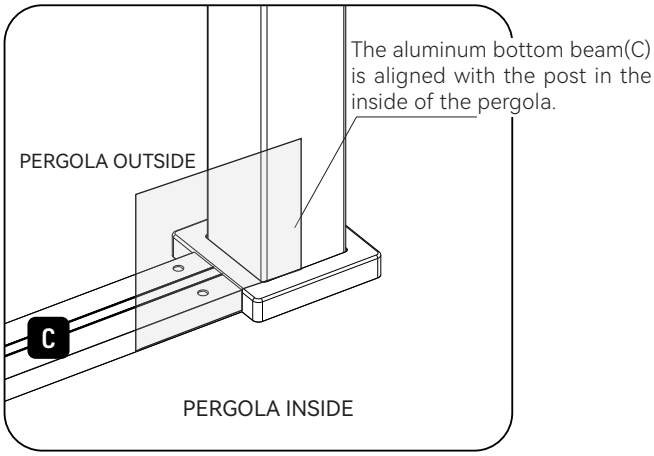

1.2

Use the 8mm drill bit to drill a 10cm depth on the pre-drilled holes.

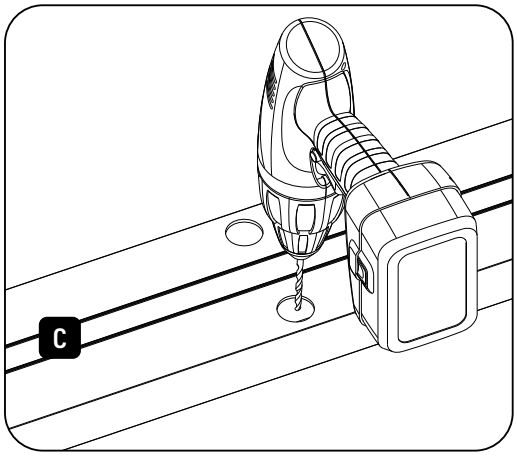

1.3

Put the expansion bolt(T3) into the drilled hole, then fix the aluminum bottom beam to the ground.

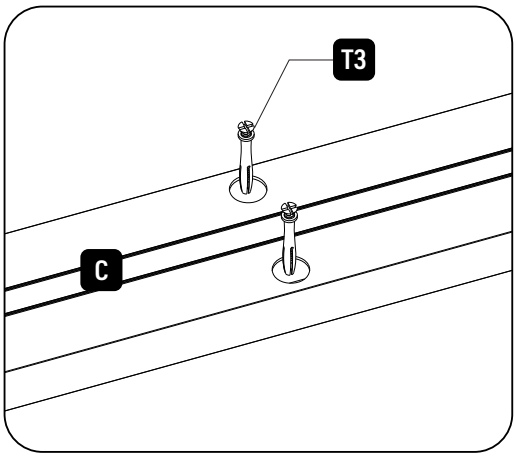

STEP 2

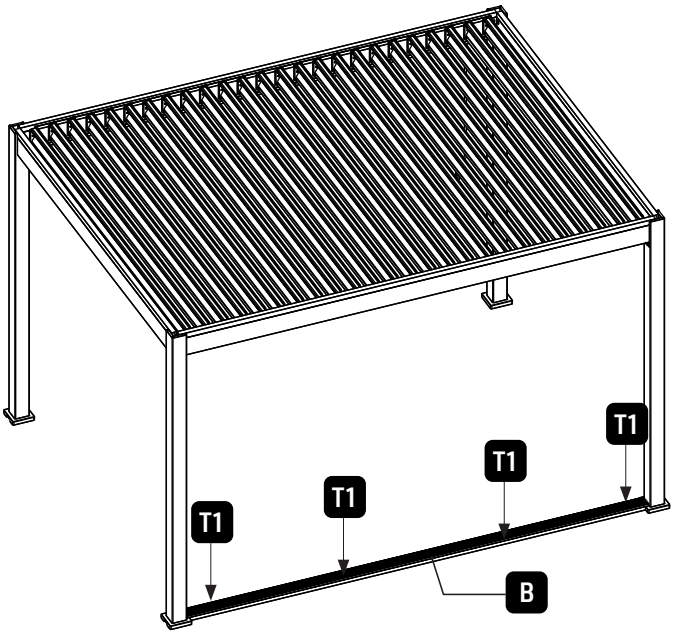

2.1

Place the sliding rail(B) on the aluminum bottom beam(C).

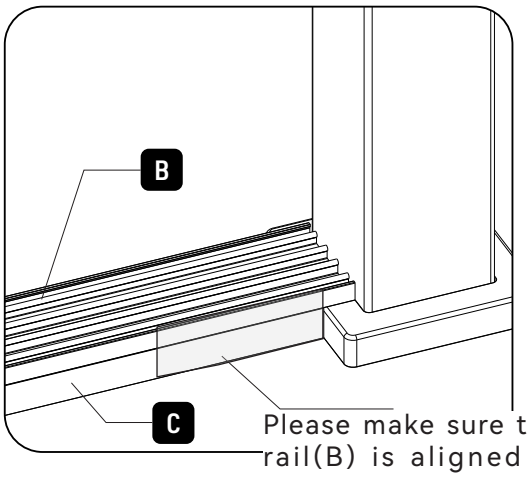

Please make sure the sliding rail(B) is aligned with the aluminum bottom beam(C).

2.2

Fix the sliding rail with screws.

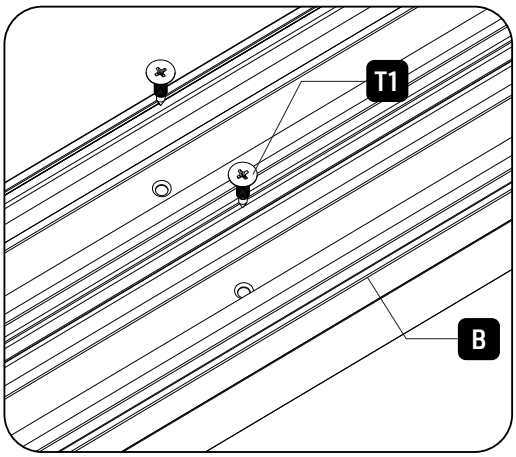

STEP 3

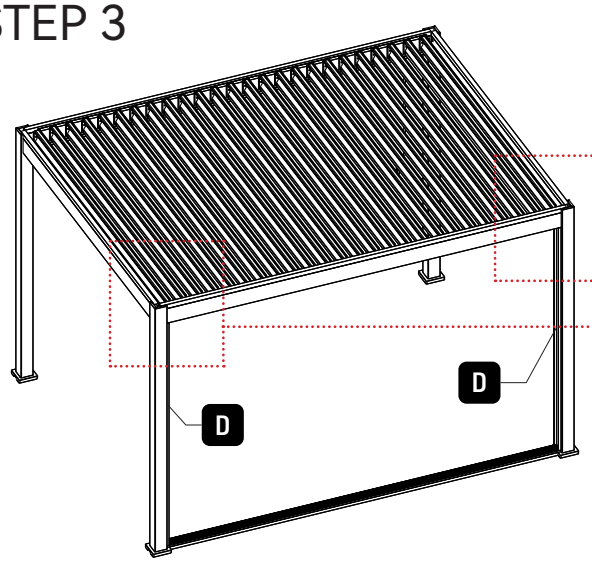

The screen frame(D) should be aligned with the post.

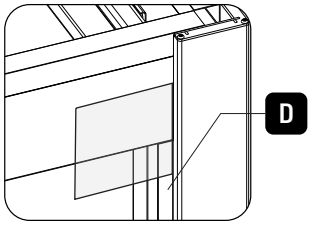

Do not install the upper screws.

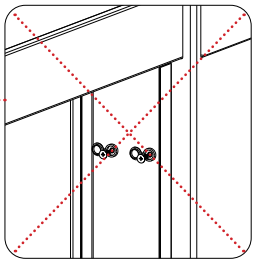

3.1
Place the screen frame(D) vertically onto the sliding rail, please use the level to ensure the vertical placement of the screen frame.

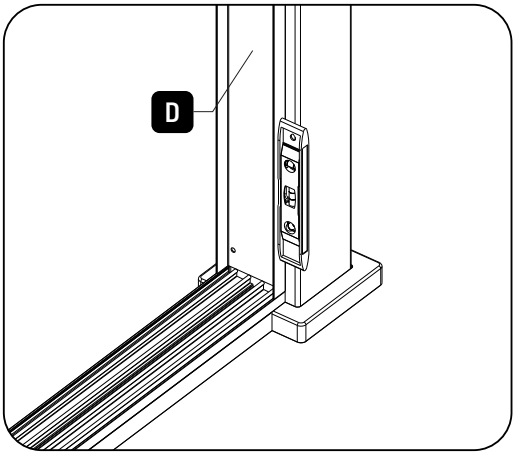

3.2
Please check that every screen frame should have six pre-drilled holes on it.

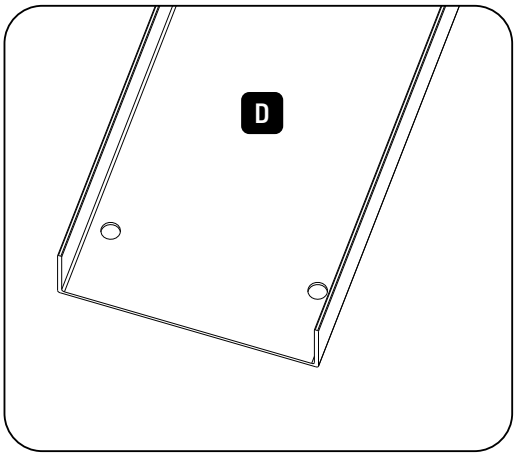

3.3
Insert the screw through the plastic cap as the diagram shows below, then put them into the holes on the screen frame.

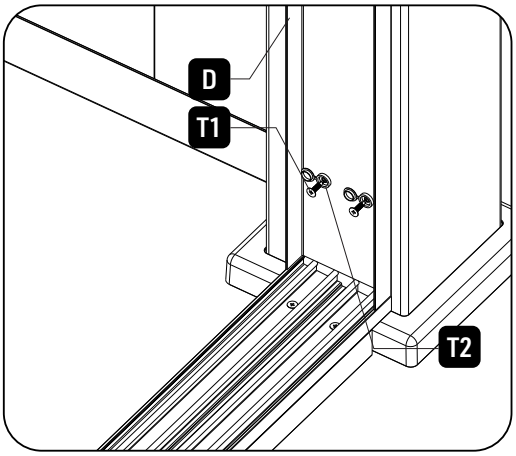

3.4
Cover the plastic cap.

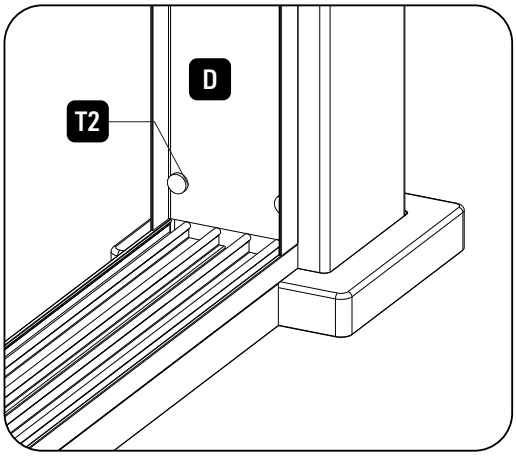

STEP 3-1

When installing your wind screen on the wall-mounted side, you will need to purchase the corresponding screws/fasteners.

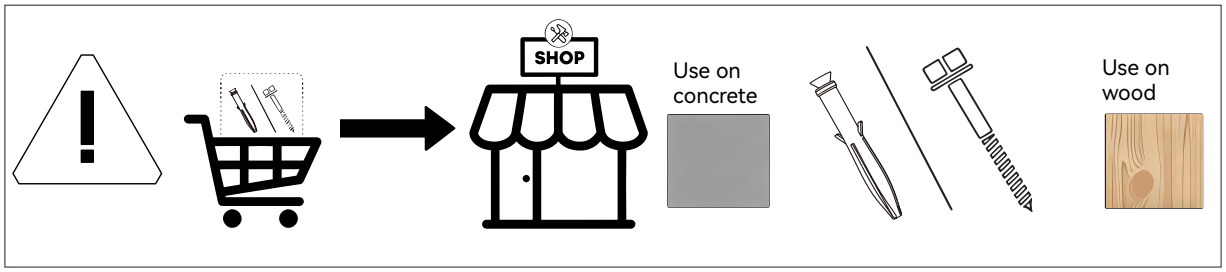

1.Use on concrete

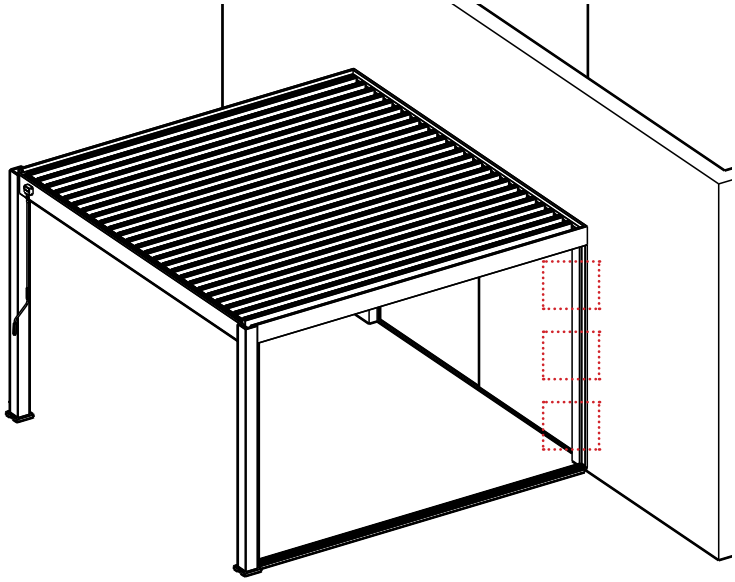

When installing the frame on the wall-mounted side of a single-sided pergola, it is necessary to first drill corresponding holes in the wall according to the positions of the holes in the frame border.

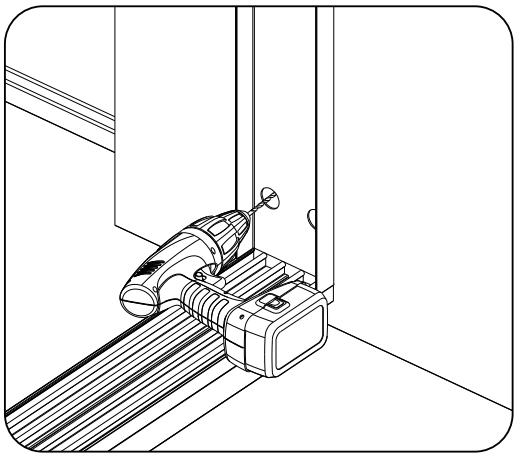

Install expansion screws into the pre-drilled holes to secure the glass sliding door frame.

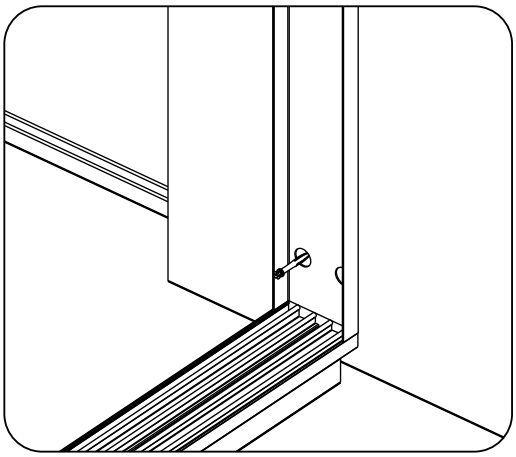

2.Use on wood

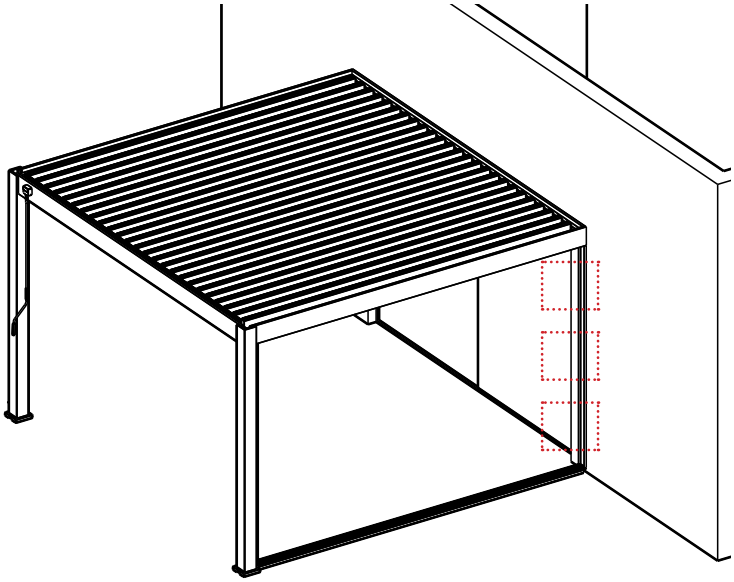

1.When the wall-mounted side is made of wooden material, directly secure the frame to the wall using fastening screws.

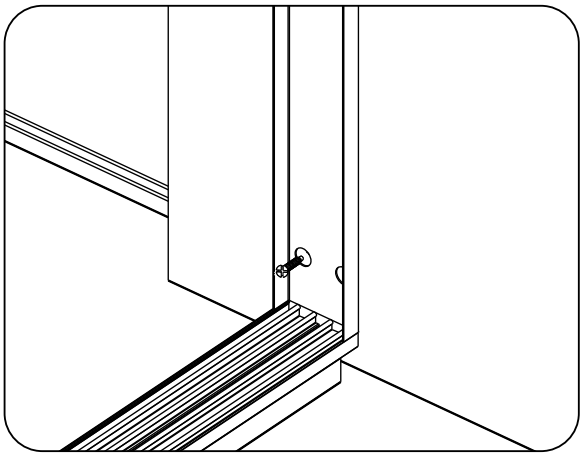

STEP 4

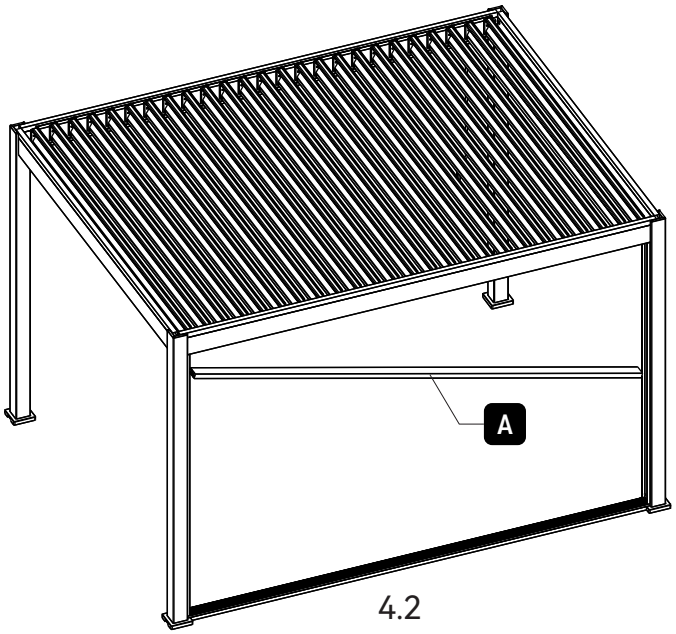

4.1

When place the top sliding rail, please note that the side with holes should be placed onto the outside of the pergola.

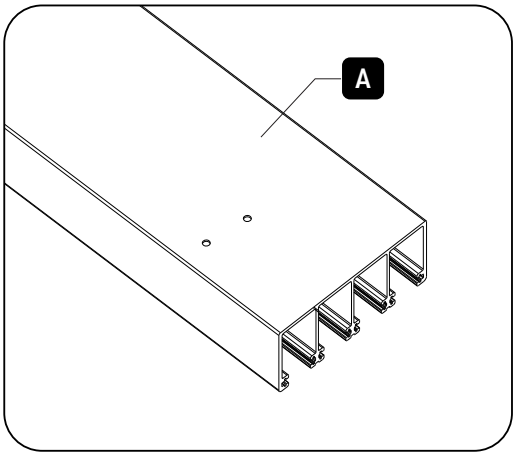

4.2

See below figure to check how the top sliding rail is placed

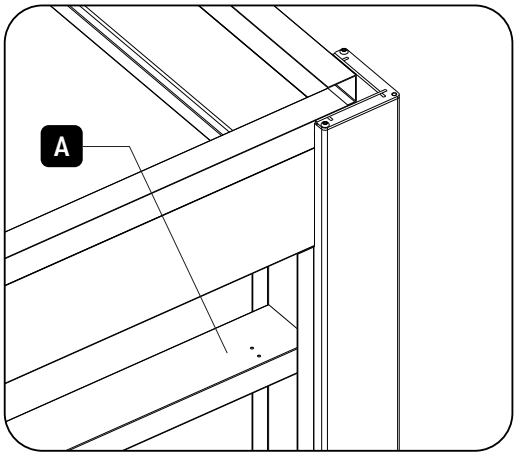

4.1

Please use the self-drilling screw to fix the top sliding rail onto the beam. Eight self-drilling screws are needed for fastening.

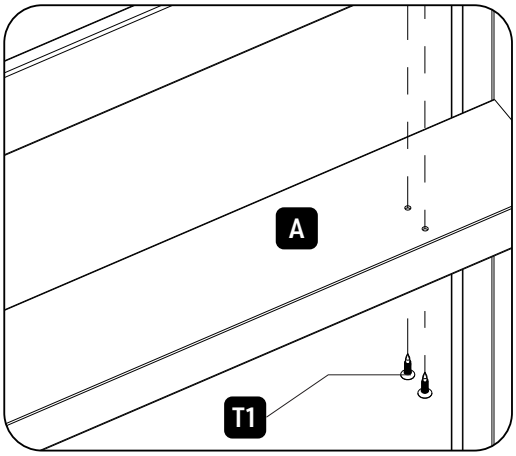

4.2

Fixed side panels.

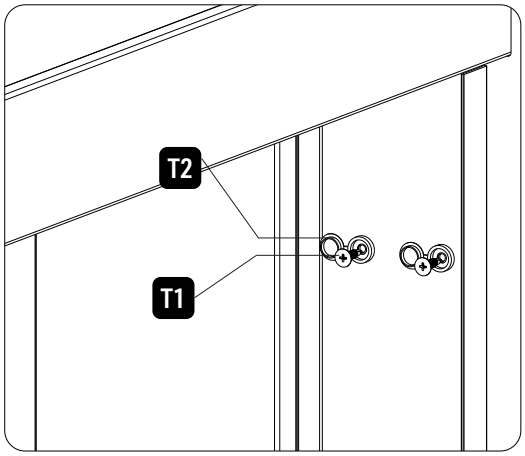

STEP 5

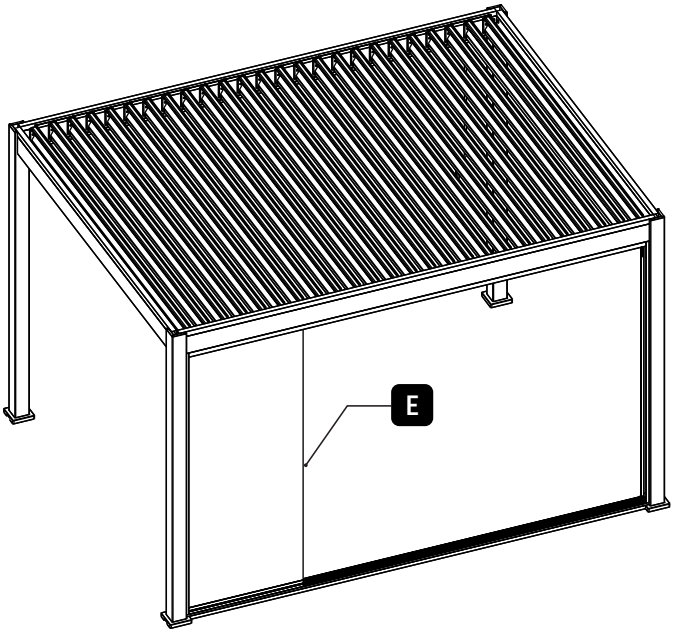

Place the glass screen. Please note to put the glass screen into the upper sliding rail in a diagonal direction, then put it into the bottom sliding rail.

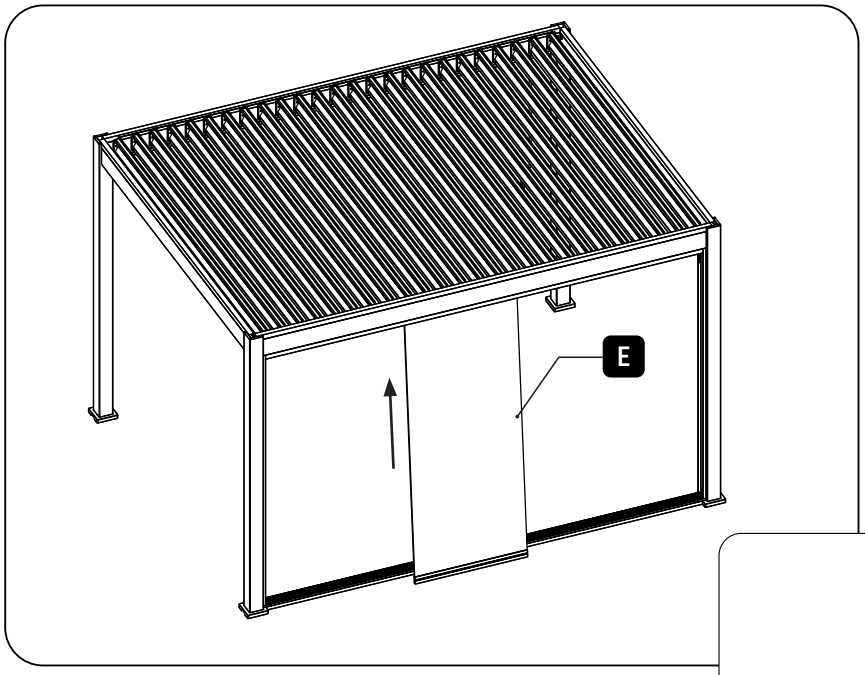

Please see the diagram below to check how the sliding rail and screen are installed.

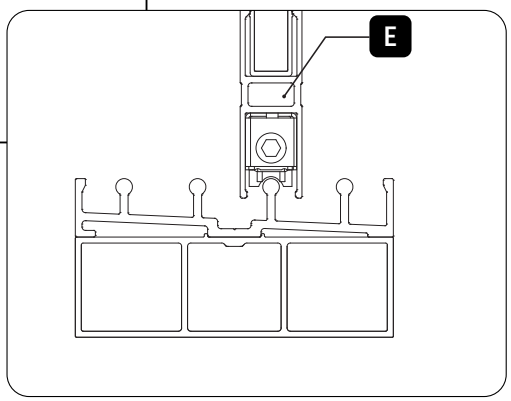

STEP 6

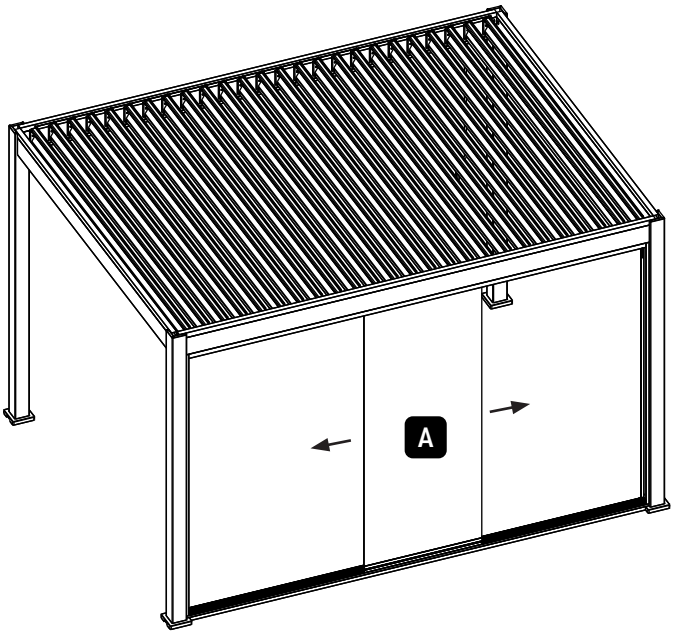

If the ground is not very even after installation, please adjust the glass screen height by regulating the foot pulley on the bottom of the glass screen.

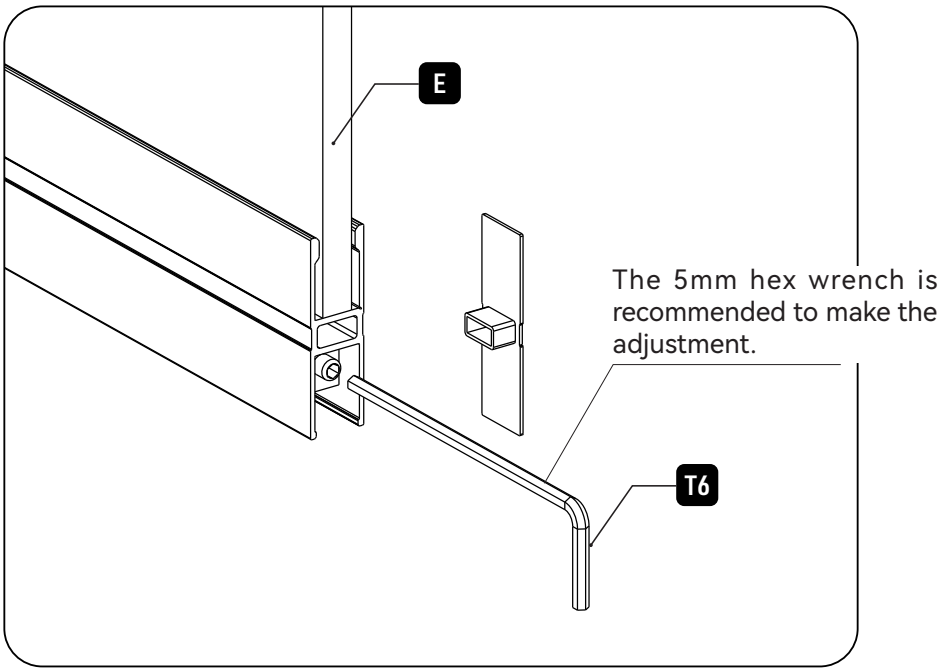

STEP 7

Install other glass screens in accordance with the assembling steps above.

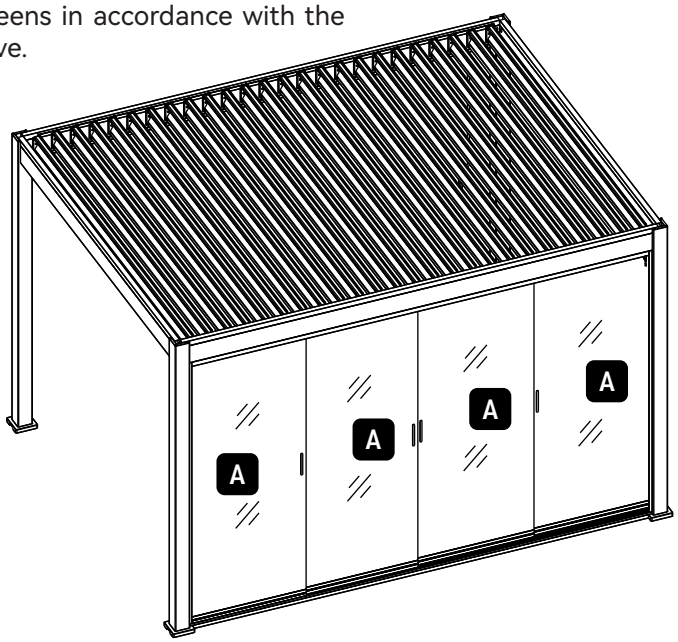
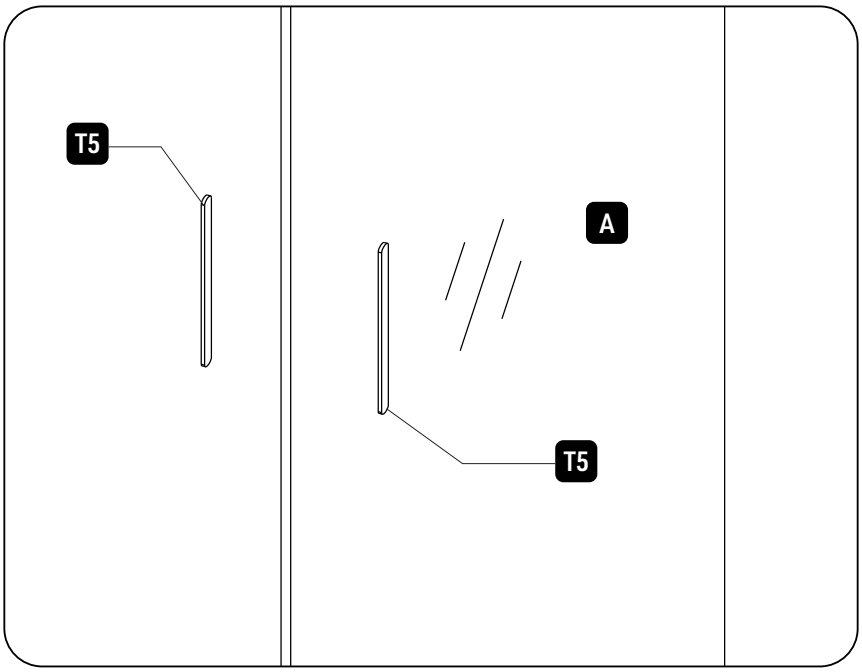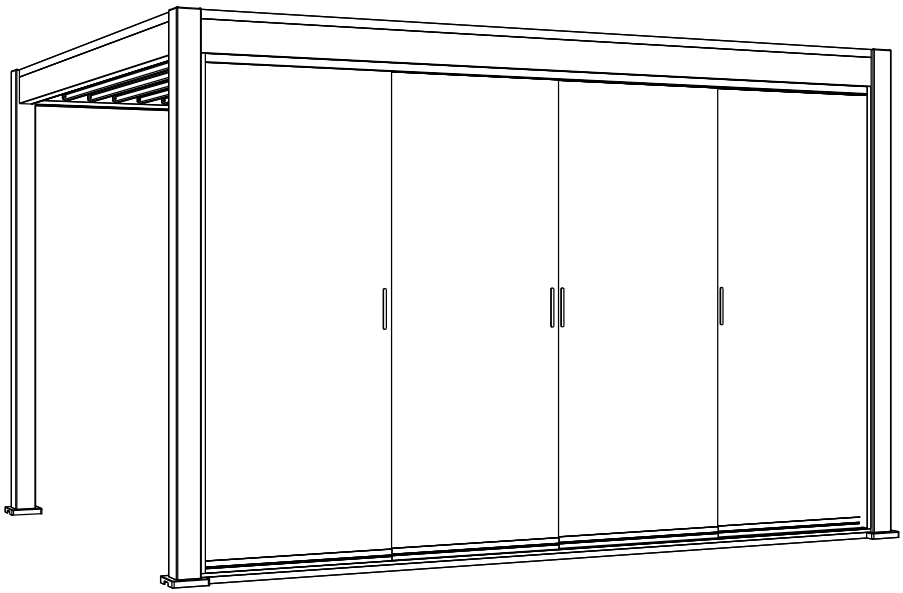
- Assemble the handle.
- Remove the handle sticker on the glass screen, then stick handles as the diagram shows below.